APP CRS	Rwy ldg	N/A
166°	TDZE	N/A
	Apt Elev	113

RNAV (GPS)-B

PETERSBURG JAMES A JOHNSON (PSG) (PAPG)

When local altimeter setting not received, use Wrangell altimeter setting and increase all MDA 80 feet. Circling NA southeast of Rwy 5-23. DME/DME RNP-0.3 NA. -10°C

MISSED APPROACH: Climb to 6000 direct WAKEV and on track 173° to LVD VOR/DME and hold, continue climb-in-hold to 6000.

AWOS-3P	ANCHORAGE CENTER	SITKA RADIO	CTAF
125.8	118.0	122.35	122.5

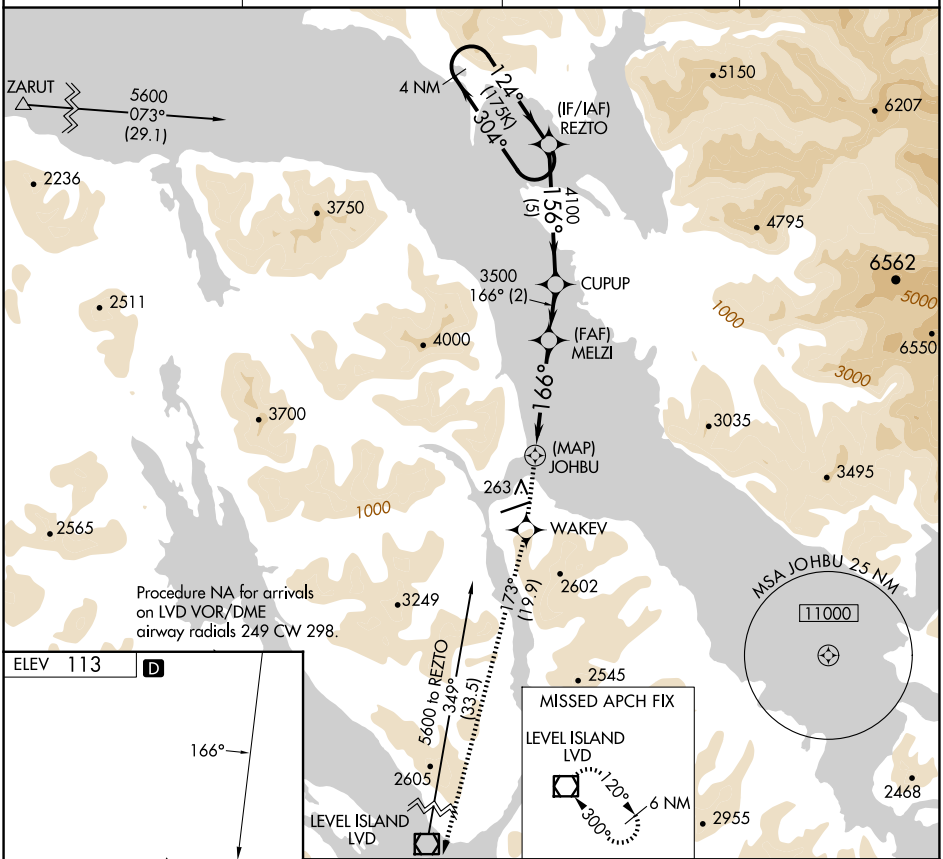

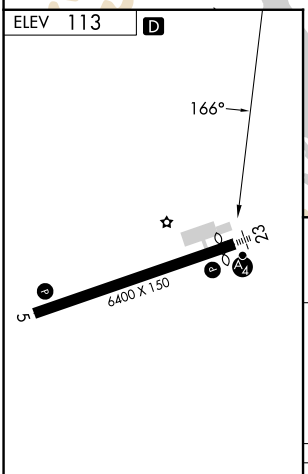

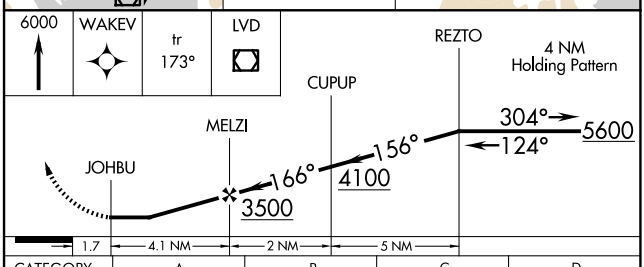

CATEGORY	A	B	C	D
C CIRCLING	2460-2 2347 (2400-2)		3080-3 2967 (3000-3)	NA

HIRL Rwy 5-23
REIL Rwy 5

AK, 17 APR 2025 to 12 JUN 2025
AK, 17 APR 2025 to 12 JUN 2025